ADC Lab Logbook

Part 2 | Section 1: Biasing and Amplification

Section 1: Biasing and Amplification

Before the Lab

The following components will be used in this session: the LT1366 op-amp module (powered by a single 5 V supply), a 1.5 kΩ input resistor, a feedback resistor Rfb, a 1 µF coupling capacitor, a pair of 10 kΩ biasing resistors, and the signal source module with earphone load (L/R).

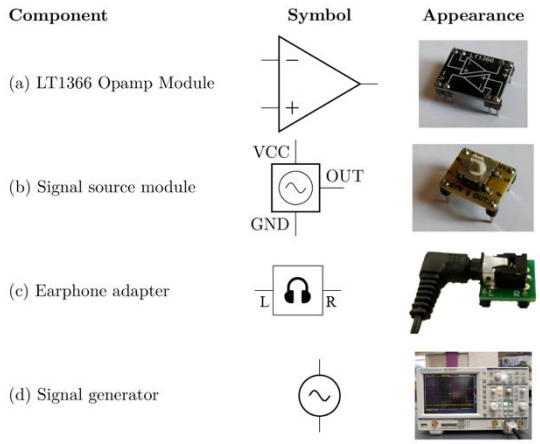

The signal source provides several operating modes, each generating a different audio waveform for testing.

Mode	Signal
0	Sine wave
1	Noisy sine wave
2	Music melody
3	Music bass
4	Unused
5	Unused
6	Unused
7	Unused
8	Melody with whine
9	Ground

Task 1: Determine the Feedback Resistance Rfb

The target closed-loop gain is −1.5 (inverting). Applying the virtual earth principle at the inverting input:

$$I_1 = I_2 \implies V_i / 1.5k = -V_{out} / Rfb$$

$$V_{out} / V_i = -Rfb / 1.5k = -1.5$$

$$Rfb = 1.5 \times 1.5k = 2.25\ k\Omega$$

A 2.25 kΩ resistor was not available in the lab, so **Rfb = 2.4 kΩ was used as the nearest available substitute**, giving a gain of approximately −1.6.

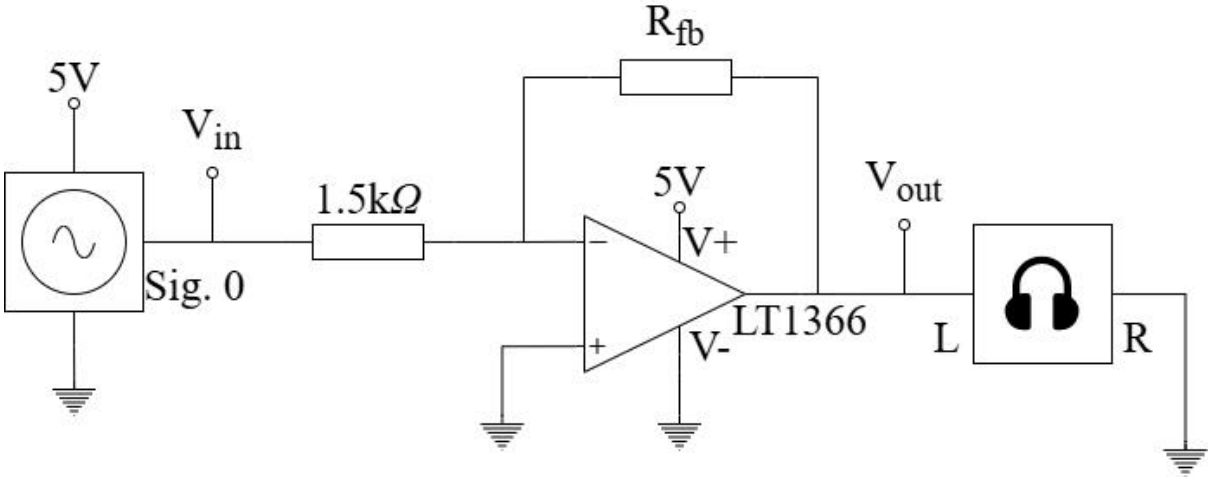

Task 2: Input Impedance Z_{input} of Inverting and Non-Inverting Amplifiers

The input impedance determines how much the source is loaded by the amplifier circuit.

Single-supply inverting amplifier (Sig. 2, 1 µF coupling cap, 1.5 kΩ input resistor, two 10 kΩ biasing resistors):

$$Z = 1/(j\omega C) + 1.5k = 1500 - j \cdot 10^5 / \omega$$

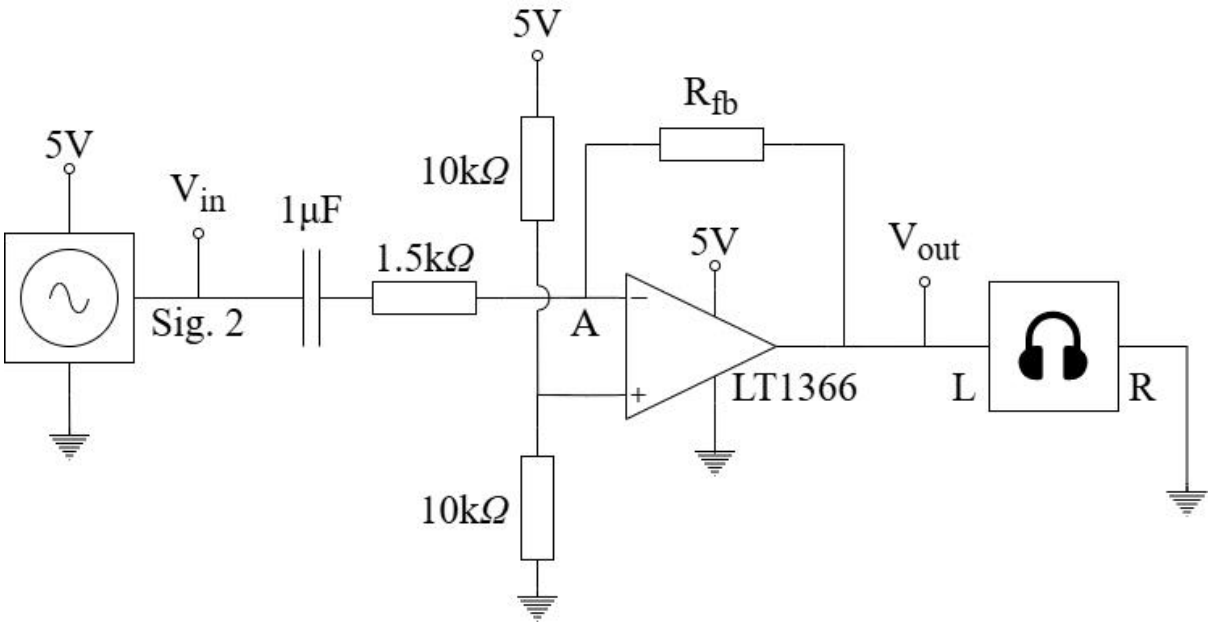

Single-supply non-inverting amplifier (Sig. 2, 1 µF coupling cap, 10 kΩ ∥ 10 kΩ divider, 33 kΩ and 470 nF in shunt to ground):

$$Z = 5k + 1/(j\omega C) = 5000 - j \cdot 10^6 / \omega$$

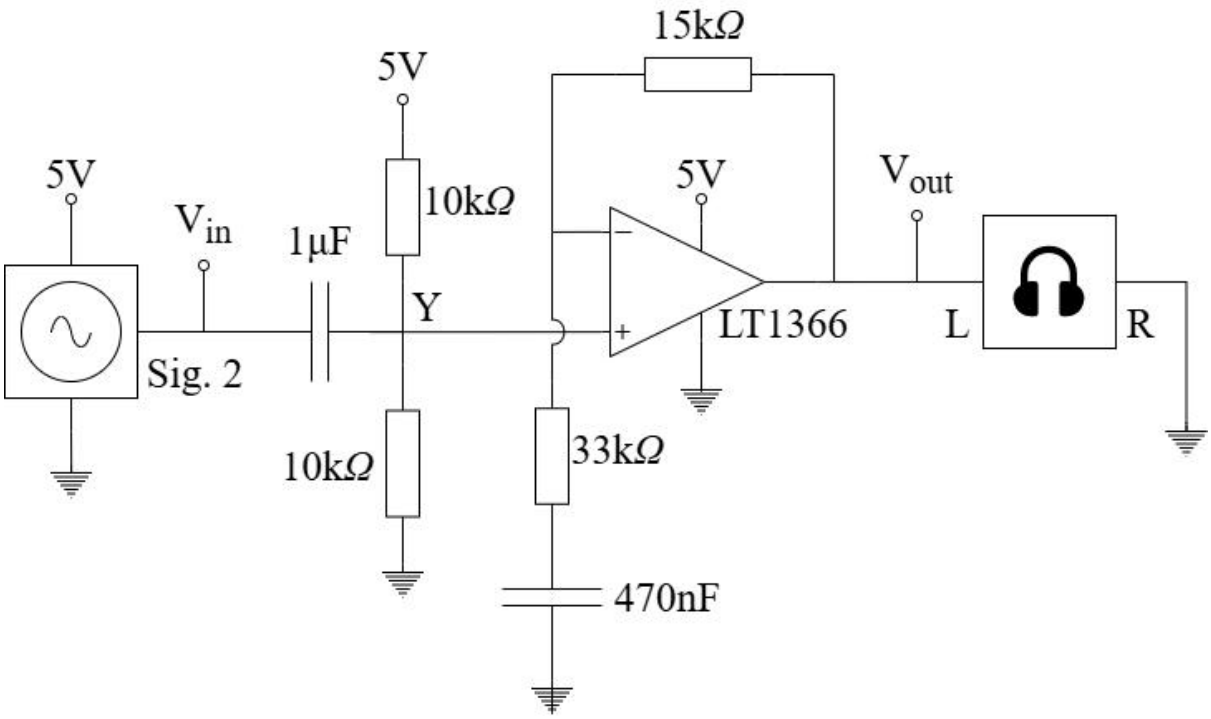

Signal Source without Amplifier

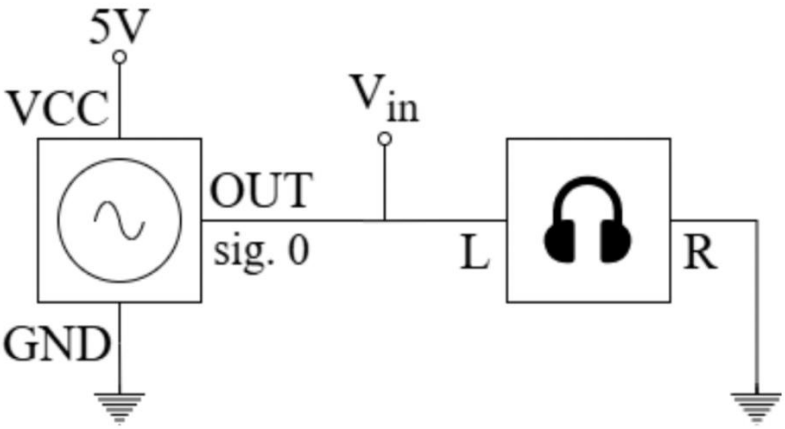

Without any amplifier, the signal source (Mode 0, Sig. 0) was connected directly to the earphone load. The output sound was very small and difficult to hear.

To investigate the cause, the output voltage was measured with and without the earphone inserted:

- **Earphone not inserted:** $V_{out} \approx 990$ mV
- **Earphone inserted:** $V_{out} \approx 31$ mV

The voltage dropped dramatically upon insertion. This is because the earphone and signal source form a potential divider: the signal source has a finite output impedance, so the voltage across the earphone depends on the impedance ratio.

From the equivalent circuit, the impedances are:

$$Z = R + 1/(j\omega C) = 1k - j \cdot 3.03 \times 10^5 / \omega \quad (\text{source: } R = 1\ k\Omega,\ C = 3.3\ \mu F)$$

$$Z_e = R + 1/(j\omega C) = 64 - j \cdot 2 \times 10^4 / \omega \quad (\text{earphone: } R = 64\ \Omega,\ C = 50\ \mu F)$$

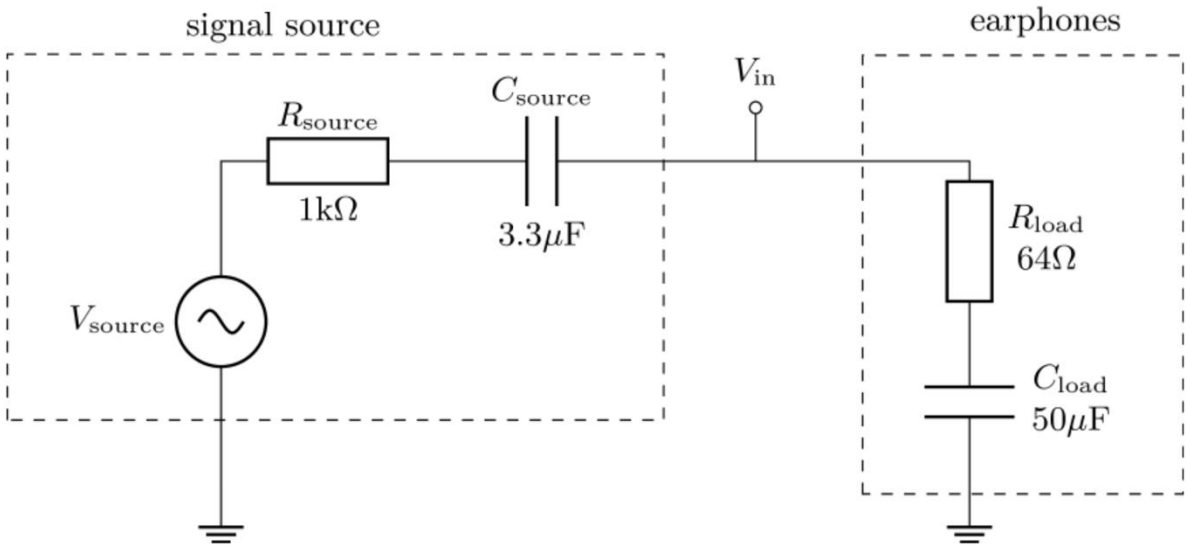

The ratio Z_e/Z indicates what fraction of the source voltage appears across the earphone:

- **At low frequency:** $Z_e/Z = (3.03 \times 10^5) / (2 \times 10^4) = 0.066 \implies$ only 6.6% of voltage reaches earphone
- **At high frequency:** $Z_e/Z = 64 / 1000 = 0.064 \implies$ only 6.4% of voltage reaches earphone

Under both low and high frequency conditions, the earphone receives only approximately 6% of the total source voltage, which explains the very low sound level. An amplifier is therefore needed to raise the signal level.

Inverting Amplifier (Single Supply, No Biasing)

An inverting amplifier was built using the LT1366 with Rfb = 2.4 kΩ and R_i = 1.5 kΩ, powered by a single 5 V supply (V+ = 5 V, V− = 0 V). The signal source was Mode 0 (Sig. 0).

Phenomenon:

- The audio became louder but distorted.
- The output waveform contained only the upper half of the signal; the lower half was clipped at V = 0. The phase difference between output and input was 180°.

Explanation:

- **Why inverted?** The inverting topology introduces a negative sign in the gain expression ($V_{out}/V_i = -Rfb/R_i$), so the output is antiphase with the input.
- **Why louder?** The gain magnitude is $Rfb/R_i = 2.4k/1.5k \approx 1.6$, amplifying the signal.
- **Why distorted?** With a single 5 V supply and V− connected to ground, the op-amp output is constrained to the range 0 V to 5 V. It cannot produce negative voltages, so the negative half of the output waveform is clipped at 0 V.

Single-Supply Inverting Amplifier (with Biasing)

Two 10 kΩ resistors were added as a potential divider between the 5 V supply and ground, creating a virtual ground at V+ = 2.5 V. A 1 μF coupling capacitor was inserted between the signal source and the input resistor to block DC.

Phenomenon:

- The sound became loud and clean.
- The output waveform was complete and undistorted. The phase difference between output and input remained 180°.

Explanation:

- **Why complete?** The biasing resistors shift the virtual ground to 2.5 V. The output can now swing both above and below 2.5 V (within the 0–5 V supply range), allowing the full waveform to be reproduced without clipping.
- **Why a coupling capacitor?** Since V+ is held at 2.5 V, a direct connection from the signal source (at 0 V DC) would create a DC potential difference, causing a bias current to flow into the source and potentially damaging it. The capacitor blocks this DC current while passing the AC signal.

How the capacitor blocks DC current:

$$Z = R + 1/(j\omega C) = 1.5k + 1/(1\mu \cdot j\omega)$$

At DC ($\omega = 0$), the capacitive reactance is infinite, so the circuit acts as an open circuit and no DC current flows.

Single-Supply Non-Inverting Amplifier

The non-inverting configuration was implemented using the LT1366 with Rf = 15 kΩ, a 33 kΩ + 470 nF feedback network to ground, and a 10 kΩ ∥ 10 kΩ input biasing divider. The node Y connects the coupling capacitor, biasing resistors, and the non-inverting input.

Gain analysis using the impedance $Z_\gamma = 1/(j\omega C) + R_\gamma$ of the lower feedback branch:

$$V_{out} / V_i = (Rf + Z_\gamma) / Z_\gamma = 1 + Rf/Z_\gamma = 1 + 15k / (33k + 1/(j\omega \times 470n))$$

- **For AC:** $Z_\gamma \approx 33$ kΩ $\Longrightarrow$ Gain ≈ 1 + 15/33 ≈ 1.45
- **For DC:** $Z_\gamma \to \infty$ (capacitor is open circuit) $\Longrightarrow$ Gain = 1 + 15/∞ = 1

Since the 470 nF capacitor acts as an open circuit for DC, the DC gain is unity. The 2.5 V bias offset is therefore reproduced faithfully at the output without amplification, preventing clipping. The AC signal, however, is amplified by a factor of 1.45.

Phenomenon:

- The sound was loud and clean.
- The waveform was amplified by a factor of 1.45, complete and undistorted. The phase difference between output and input was 0°.

Section 1 Challenge: Audio Mixer

An audio mixer was constructed based on the single-supply inverting amplifier topology. Two signal sources (Sig. 2 and Sig. 3, both Mode 0) were connected to the inverting input through separate potentiometers (R_a and R) and coupling capacitors (1 µF each). The feedback resistor was Rf = 4.7 kΩ, and a 10 kΩ ∥ 10 kΩ potential divider set the virtual ground at V+ = 2.5 V.

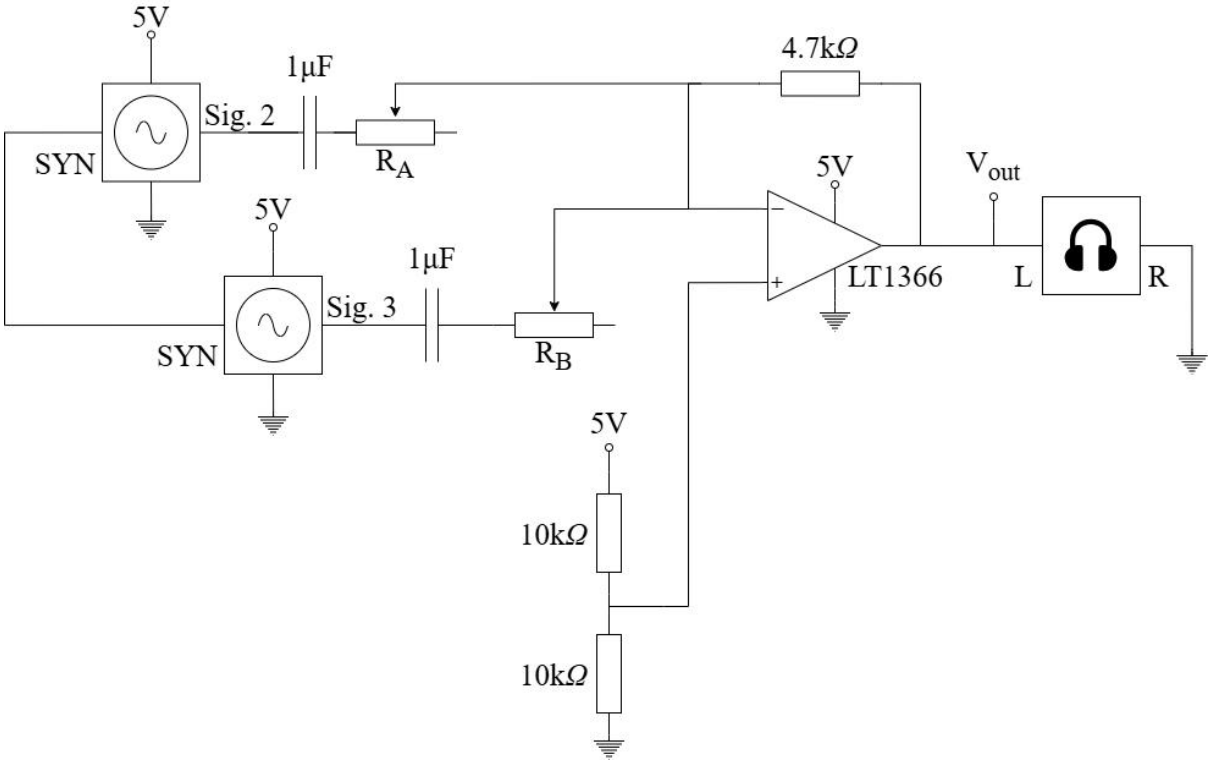

Using superposition (setting V+ = 0):

$$(0 - V_{out})/Rf + (0 - V_a)/R_a + (0 - V_b)/R_b = 0$$

$$V_{out} = -Rf(V_a/R_a + V_b/R_b)$$

Including the 2.5 V DC offset from the biasing divider (when $V_a = V_b = 0$, $V_{out} = 5 \times 10k/(10k + 10k) = 2.5$ V):

$$V_{out} = 2.5 - Rf(V_a/R_a + V_b/R_b)$$

Phenomenon:

- The sound was loud. Adjusting either potentiometer changed the relative loudness of the two sources.
- The output waveform was the superposition (sum) of the two input waveforms, with amplitudes scaled by the potentiometer settings.

How it works:

- **Biasing:** A potential divider on V+ shifts the virtual ground to 2.5 V, enabling full waveform reproduction without clipping.
- **DC blocking:** Coupling capacitors at each input prevent DC from the signal sources from disturbing the 2.5 V bias.
- **Mixing:** Both signal sources are connected through potentiometers R_a and R . Adjusting these resistances changes the contribution of each source to the output, allowing variable mixing of the two audio signals.